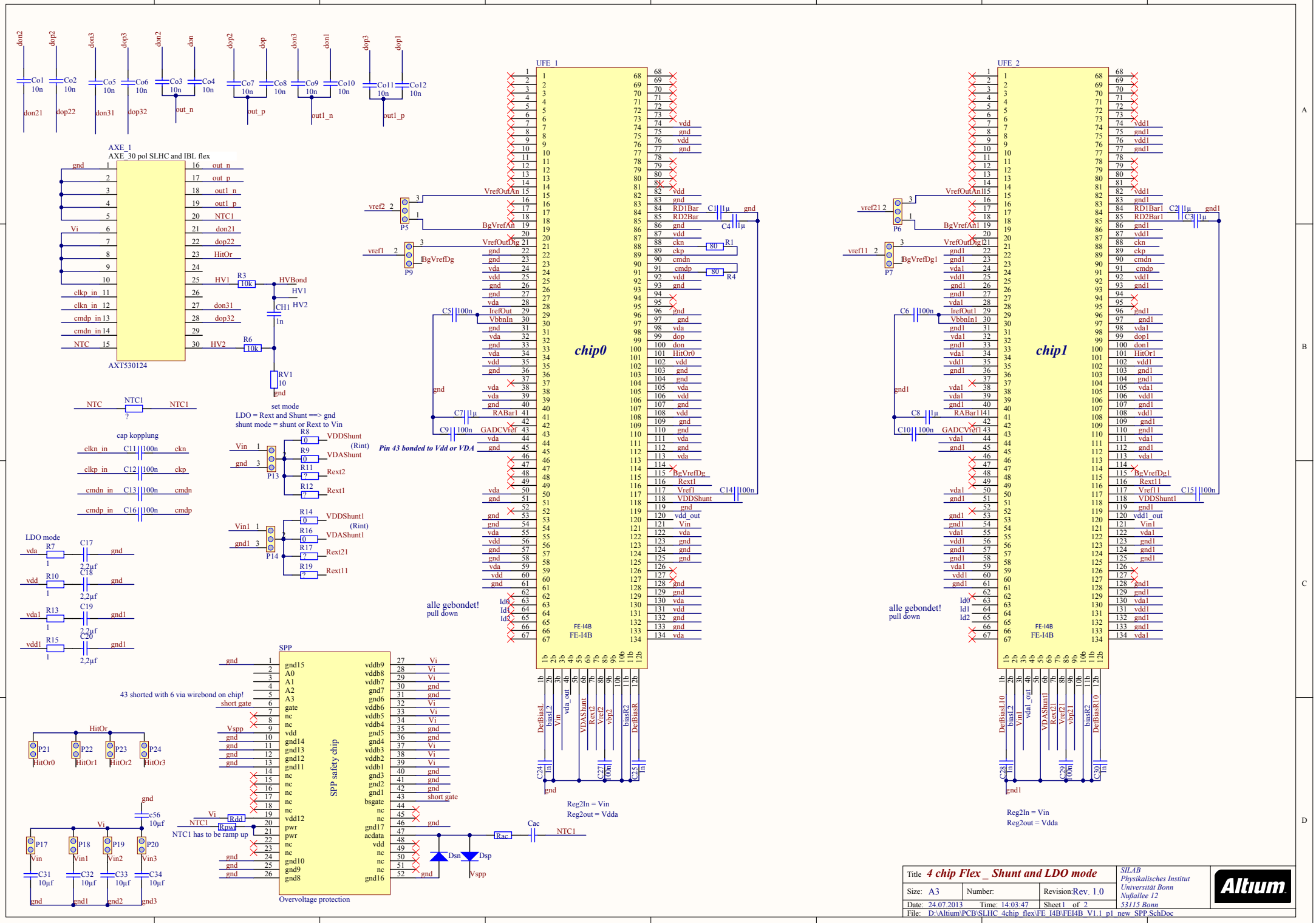
UFE_1
chip0
FE-I4B
UFE_2
chip1
FE-I4B
AXE_1
AXE_30 pol SLHC and IBL flex
AXT530124
SPP
SPP safety chip
Overvoltage protection
Pin 43 bonded to Vdd or VDA
alle gebondet!
pull down
43 shorted with 6 via wirebond on chip!
NTC1 has to be ramp up
set mode
LDO = Rext and Shunt ==> gnd
shunt mode = shunt or Rext to Vin
cap kopplung
LDO mode
HitOr
Reg2In = Vin
Reg2out = Vdda
Title 4 chip Flex _ Shunt and LDO mode
Size: A3
Number:
Revision: Rev. 1.0
Date: 24.07.2013
Time: 14:03:47
Sheet 1 of 2
File: D:\Altium\PCB\SLHC_4chip_flex\FE_I4B\FEI4B_V1.1_p1_new_SPP.SchDoc
SILAB
Physikalisches Institut
Universität Bonn
Nußallee 12
53115 Bonn
Altium

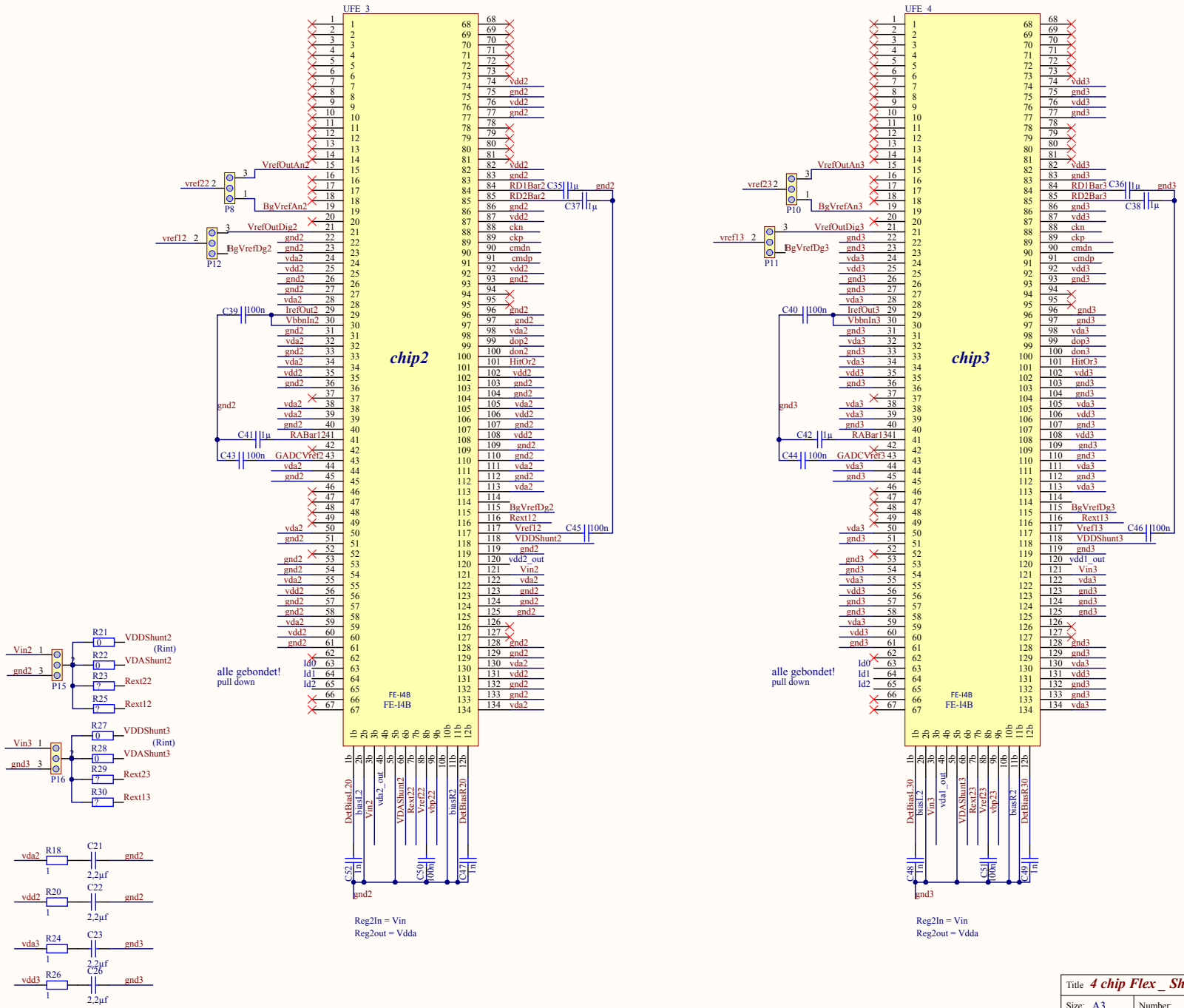

Title	*4 chip Flex _ Shunt and LDO mode*		*SILAB Physikalisches Institut Universität Bonn Nußallee 12 53115 Bonn*
Size: A3	Number:	Revision: Rev. 1.0	
Date: 24.07.2013	Time: 14:03:47	Sheet 2 of 2	
File: D:\Altium\PCB\SLHC_4chip_flex\FE_I4B\FEI4B_V1.1_p2.SchDoc			

Y=37.170
Y'=36,7
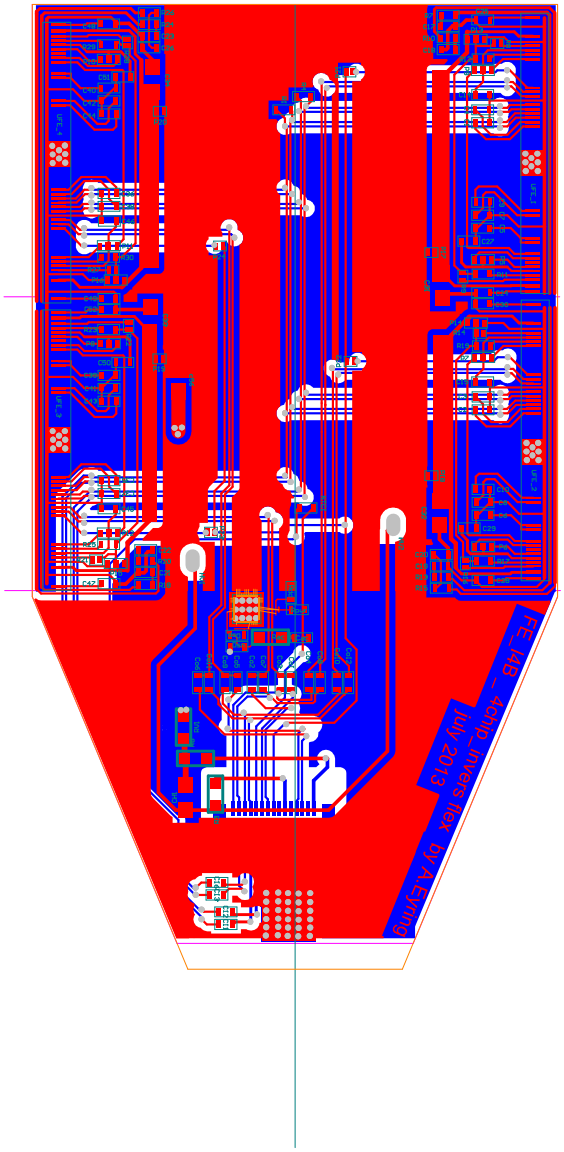
X=41.315