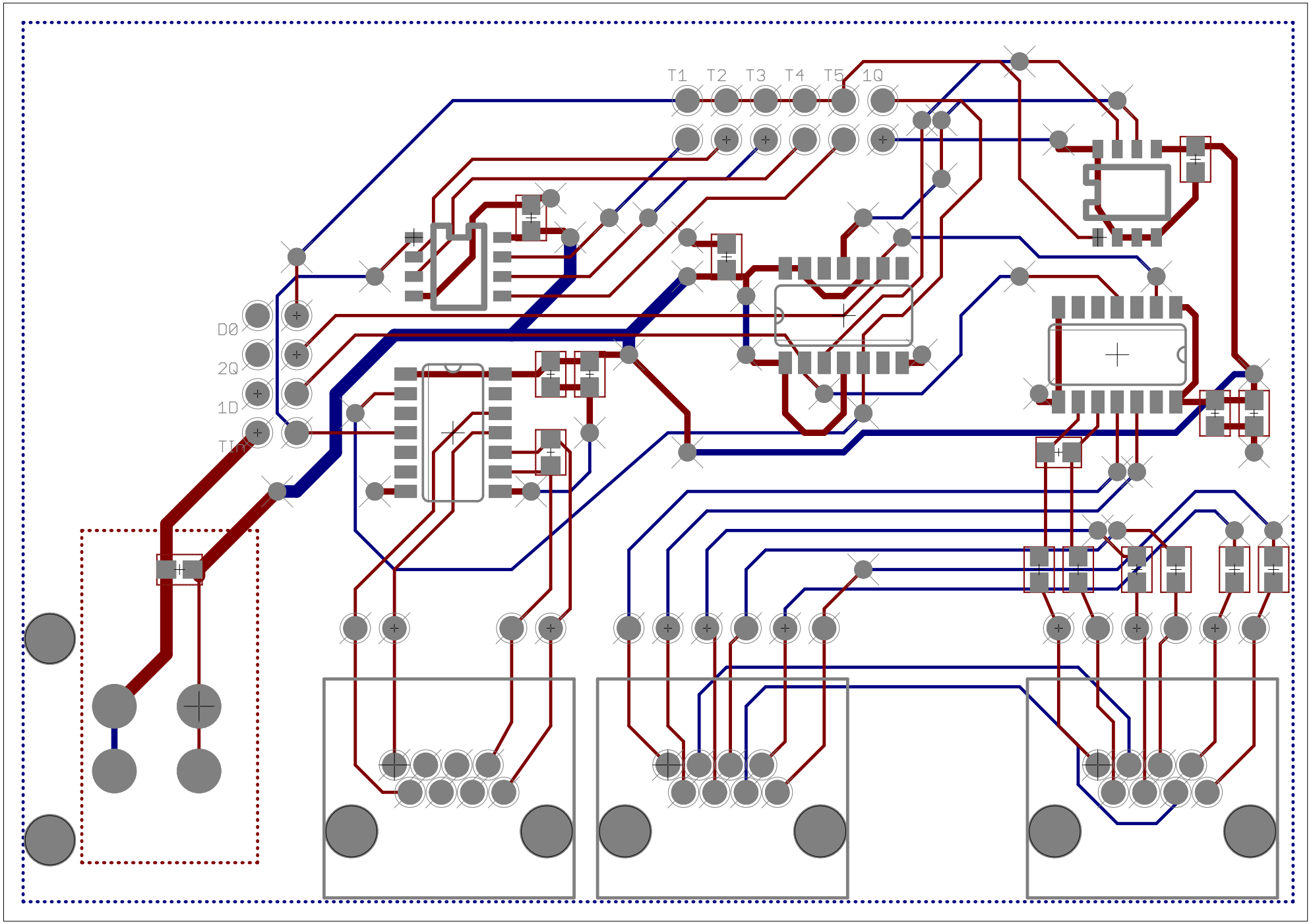
T1
T2
T3
T4
T5
1Q
D0
2Q
1D
T1